XREFS: 1080424-SUBDIVISION-PLAN
1080424-SURVEY DATA
1080424-AS BUILT

WESTFIELD ZONING RS-24 : SINGLE FAMILY RESIDENCE

ORDINANCE		REQUIRED	PROPOSED
	MINIMUMS		
§11-04.E.1	LOT AREA	24,000 SF	28,753 SF (0.660 Ac)
§11-04.E.2	LOT WIDTH	120 FT	158.49 FT
	AREA WITHIN FIRST 200FT OF DEPTH (SF)	24,000 SF	28,800 SF
§11-04.E.3	LOT FRONTAGE	120 FT	117.19 FT
§11-04.E.4	LOT DEPTH	180 FT	187 FT
	SETBACKS		
§11-04.E.5	FRONT YARD	50 FT	50.59 FT
§11-04.E.6	SIDE YARD	15 FT	17.10 FT
§11-04.E.7	REAR YARD	50 FT	50 FT
	MAXIMUMS		
§11-04.E.8	BUILDING HEIGHT	2½ STORY | 33.5 FT	2½ STORY | 33.5 FT
§11-04.E.9 | §12.04E	BUILDING F.A.R.	25% | <8,000SF	13.6% (3,908 SF)
§11-04.E.10 | §12.04F	BUILDING COVERAGE	15% | <4,000SF	9.2% (2,650 SF)
§11-04.E.11 | §12.04G	IMPROVEMENT COVERAGE	30% | <8,000SF	21.0% (6,046 SF)
§11-04.E.12	EAVE HEIGHT	22 FT	22 FT
	ACCESSORY STRUCTURE		
§13.02 D.3	POOL LOCATION (SIDE & REAR YARD)	15 FT	15 FT

AVERAGE GRADE AROUND FOUNDATION:
67.0+ 60.5+ 59.0+ 63.0+ 66.0+ 66.4+ 66.25+ 66.25+ 66.75+ 66.75+ 67.0 = 714.9 / 11 = 65.0

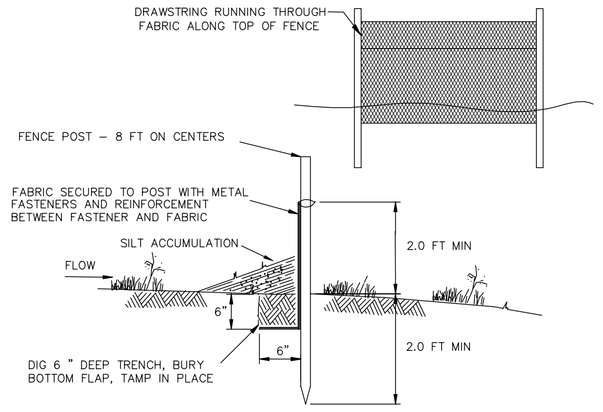

SILT FENCE DETAIL
N.T.S.

REQUIREMENTS FOR SILT FENCE:

1. FENCE POSTS SHALL BE SPACED 8 FEET CENTER-TO-CENTER OR CLOSER. THEY SHALL EXTEND AT LEAST 2 FEET INTO THE GROUND AND EXTEND AT LEAST 2 FEET ABOVE GROUND. POSTS SHALL BE CONSTRUCTED OF HARDWOOD WITH A MINIMUM DIAMETER THICKNESS OF 1 1/2 INCHES.
2. A METAL FENCE WITH 6 INCH OR SMALLER OPENINGS AND AT LEAST 2 FEET HIGH MAY BE UTILIZED, FASTENED TO THE FENCE POSTS, TO PROVIDE REINFORCEMENT AND SUPPORT TO THE GEO-TEXTILE FABRIC WHERE SPACE FOR OTHER PRACTICES IS LIMITED AND HEAVY SEDIMENT LOADING IS EXPECTED.
3. A GEO-TEXTILE FABRIC, RECOMMENDED FOR SUCH USE BY THE MANUFACTURER, SHALL BE BURIED AT LEAST 6 INCHES DEEP IN THE GROUND. THE FABRIC SHALL EXTEND AT LEAST 2 FEET ABOVE THE GROUND. THE FABRIC MUST BE SECURELY FASTENED TO THE POSTS USING A SYSTEM CONSISTING OF METAL FASTENERS (NAILS OR STAPLES) AND A HIGH STRENGTH REINFORCEMENT MATERIAL (NYLON WEBBING, GROMMETS, WASHERS, ETC.) PLACED BETWEEN THE FASTENER AND THE GEO-TEXTILE FABRIC. THE FASTENING SYSTEM SHALL RESIST TEARING AWAY FROM THE POST. THE FABRIC SHALL INCORPORATE A DRAWSTRING IN THE TOP PORTION OF THE FENCE FOR ADDED STRENGTH.

MAINTENANCE

1. SILT FENCE SHALL BE INSPECTED AFTER EVERY RAIN EVENT. ANY DAMAGE MUST BE REPAIRED IMMEDIATELY.
2. SEDIMENT AND DEBRIS SHALL BE REMOVED FROM THE UPSTREAM SIDE OF THE SILT FENCE WHEN IT ACCUMULATES TO THE EXTENT THAT VISIBLE BULGES DEVELOP IN THE FENCE OR REACHES HALFWAY UP THE FENCE.
3. SILT FENCE SHALL ONLY BE REMOVED AFTER VEGETATIVE GROWTH OR OTHER STABILIZATION MEASURES HAVE BEEN ACHIEVED.

SOIL EROSION AND SEDIMENT CONTROL NOTES

1. All soil erosion and sediment control practices will be installed in accordance with the NJ Standards for Soil Erosion and Sediment Control, adopted July 1999, as amended and will be in place prior to any major soil disturbance, or in their proper sequence and maintained until permanent protection is established.
2. Any disturbed area that will be left exposed for more than thirty (30) days and not subject to construction traffic shall immediately receive a temporary seeding. If the season prohibits temporary seeding, the disturbed area will be mulched with salt hay or equivalent and bound in accordance with the NJ Standards (i.e., peg and twine, mulch netting, or liquid mulch binder).
3. Immediately following initial disturbance or rough grading, all critical areas subject to erosion will receive a temporary seeding in combination with straw mulch or a suitable equivalent, at a rate of 2 tons per acre, in accordance with the NJ Standards.
4. Stabilization Specifications:
   Mulch:
   Mulching is required on all seeding. Mulch will insure against erosion before grass is established and will promote faster an earlier establishment. (The existence of satisfactory permanentvegetation at the time of project or unit completion shall be deemed as compliance with this mulching requirement.
   1. Mulch Materials should be unrotted small grain straw, hay, free of seeds or salt hay to be applied at a rate of 1.5 to 2 tons per acre (70 to 90 lbs/1,000 sf) except that where a crimper is used instead of a liquid mulch binder (tackifying or adhesive agent,) the rate of application must be double the lower rate. Mulch chopper/blowers must not grind the material;
   2. Spread uniformly by hand or mechanically so that approximately 75% to 95% of the soil surface will be covered. For uniform distribution of hand spread mulch, divide the area into approximately 100 sq.ft sections and distribute 70 to 90 pounds within each area section.
   3. Mulch anchoring should be accomplished immediately after placement. Synthetic or organic binders: binders such as Curasol, DCA-70, Petro-set and Terra-Tack may be used at rates recommended by the manufacturer to anchor mulch materials.
   Note: All names given are registered trade names. This does not constitute a recommendation of these products to the exclusion of other products.
   4. Topdressing
      A. Spring seedings will require an application of fertilizer such as 10-10-10 or equivalent at 400 pounds per acre or 10 lbs/1000 sf between September 1 and October 15.
      B. Fall seedings will require the above between March 15 and May 1.
      Note: This follow-up topdressing is not mandatory if slow release nitrogen (300 lbs 38-0-0 per acre or equiv.is used in addition to suggested fertilizer.)
5. The site shall at all times be graded and maintained such that all storm water run-off is diverted to soil erosion and sediment control facilities. All sedimentation structures will be inspected and maintained on a regular basis.
6. A crushed stone, vehicle wheel-cleaning blanket will be installed wherever a construction access road intersects any paved roadway. Said blanket will be composed of 2 1/2" crushed stone, 6" thick, will be at least 20' by 50' or as shown on the vehicle tracking pad table and should be underlain with a suitable synthetic sediment filter fabric and maintained.
7. Maximum side slopes of all exposed surfaces shall not exceed 3:1 unless otherwise approved by the District.
8. All driveways must be stabilized with 2 1/2" crushed stone or sub-base prior to individual lot construction.
10. Paved roadways must be kept clean at all times.
11. All catch basin inlets will be protected with a crushed stone or fabric filter.
12. All storm drainage outlets will be stabilized, as required, before the discharge points become operational.
13. All dewatering operations must discharge directly into a sediment filter area. The sediment filter should be composed of a suitable sediment filter fabric.
14. The Somerset-Union Soil Conservation District must be notified, in writing, at least 72 hours prior to any land disturbance. (Somerset County, 4-H Center, 308 Milltown Rd., Bridgewater, NJ 08807, Tele: 908-526-2701, Fax: 908-526-7017).
15. The Somerset-Union Soil Conservation District may request additional measures to minimize on or off-site erosion problems during construction.

TOPSOIL STOCKPILE PROTECTION

1. Construct temporary diversion berm and/or hay bale barrier around stockpile area as required.
2. Apply limestone at a rate of 90 lbs/1000 S.F.
3. Apply fertilizer (10-20-10) at a rate of 11 lbs/1000 S.F.
4. Apply Perennial Ryegrass at a rate of 1 lb/1000 S.F.
5. Mulch with unrotted salt hay or small grain straw immediately after seeding. Apply at a rate of 70 to 90 lbs/1000 S.F.

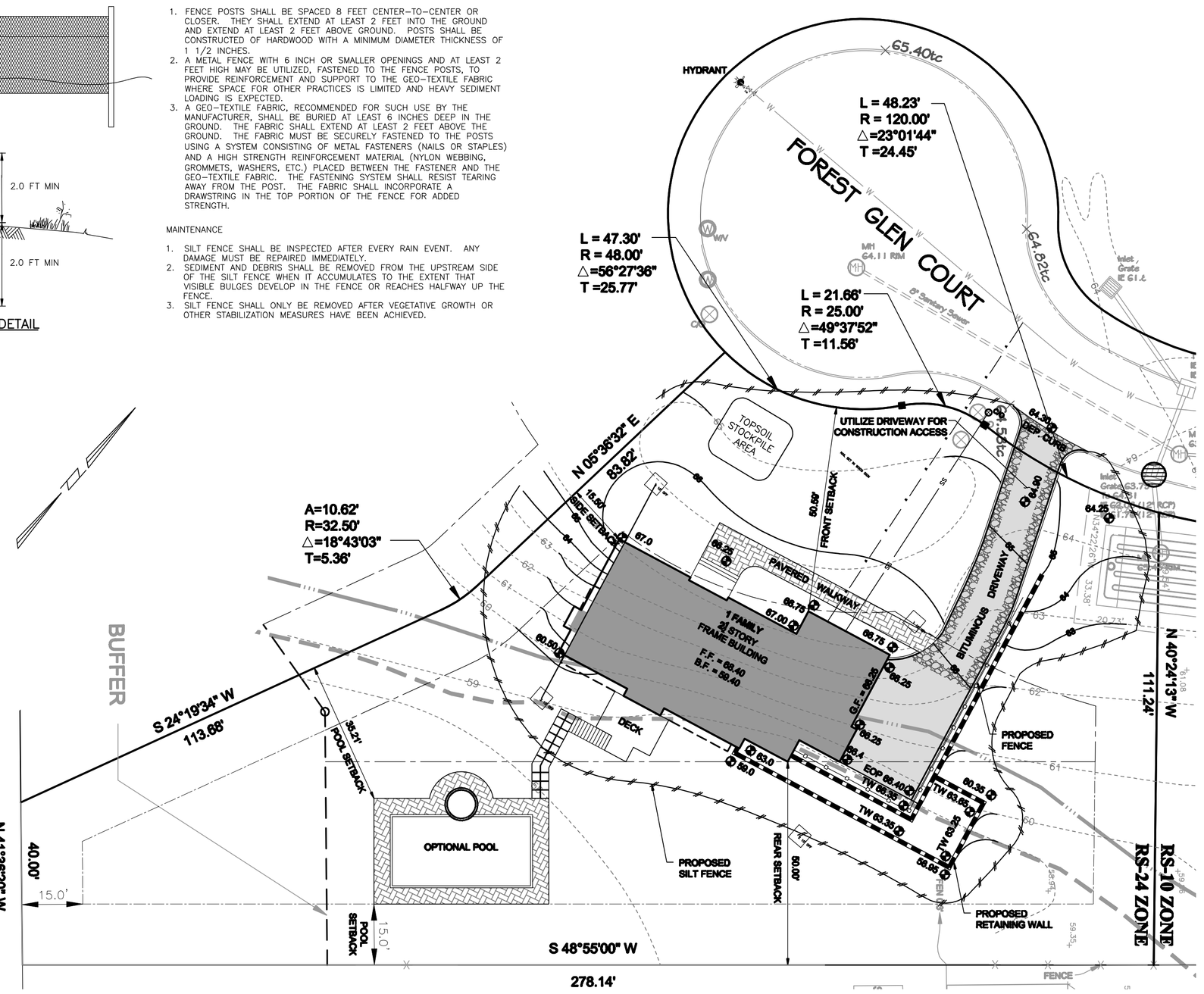

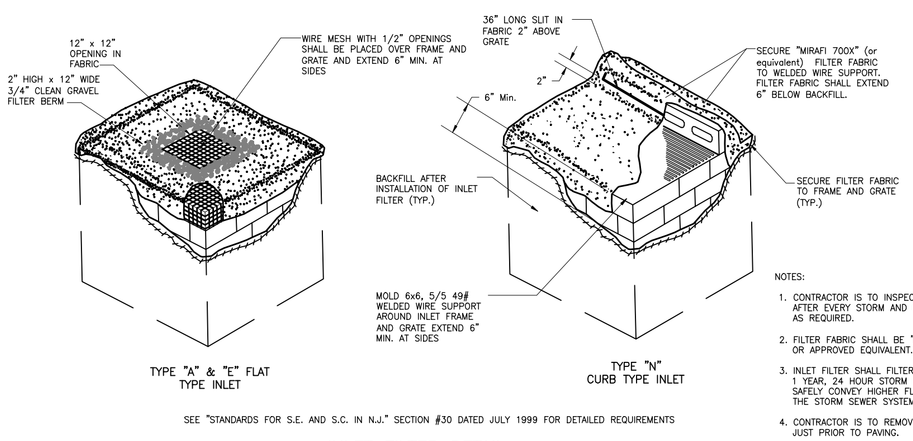

NOTES:

1. CONTRACTOR IS TO INSPECT INLET FILTER AFTER EVERY STORM AND CLEAN OR REPLACE AS REQUIRED.
2. FILTER FABRIC SHALL BE "MIRAFI 700X" TYPE OR APPROVED EQUIVALENT.
3. INLET FILTER SHALL FILTER RUNOFF FROM THE 1 YEAR, 24 HOUR STORM EVENT AND SHALL SAFELY CONVEY HIGHER FLOWS DIRECTLY INTO THE STORM SEWER SYSTEM.
4. CONTRACTOR IS TO REMOVE FABRIC AND MESH JUST PRIOR TO PAVING.

SEE "STANDARDS FOR S.E. AND S.C. IN N.J." SECTION #30 DATED JULY 1999 FOR DETAILED REQUIREMENTS

INLET FILTER DETAIL

LEGEND

EXISTING		PROPOSED
65.40 ×	Spot Elevation	× 63.0
	Contours	
	Inlet	
	Light Pole	
	Curb	
	Concrete	
	Sawcut	
	Walls	
	Edge of Pavement	
	New Pavement	
	Pavers	
	Hydrant	
—X—	Fence	—o—o—
—GAS—	Gas Connection	
—W—	Water Connection	
W/V	Water Valve	
C/O	Clean Out	
	To Be Removed	×

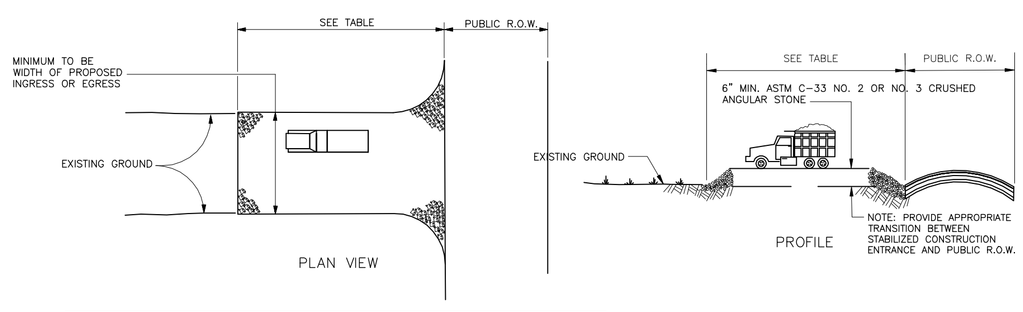

PERCENT SLOPE OF ROADWAY	LENGTH OF STONE REQUIRED	
	COURSE GRAINED SOILS	FINE GRAINED SOILS
0 TO 2%	50 FT.	100 FT.
2 TO 5%	100 FT.	200 FT.
> 5%	ENTIRE SURFACE STABILIZED WITH FABC BASE COURSE	

SEE "STANDARDS FOR S.E. AND S.C. IN N.J." SECTION #29 DATED JULY 1999 (AS AMENDED) FOR DETAILED REQUIREMENTS

STABILIZED CONSTRUCTION ACCESS DETAIL
N.T.S.

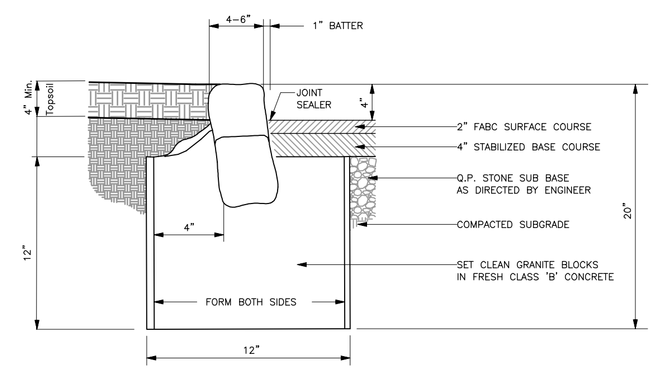

GRANITE BLOCK CURB & PAVEMENT DETAIL

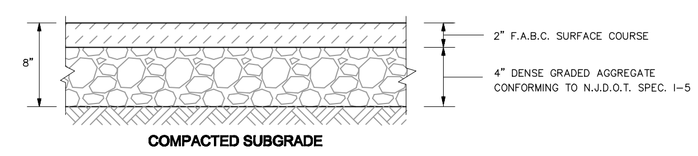

PAVEMENT DESIGN

TEMPORARY VEGETATIVE STABILIZATION GRASSES, SEEDING RATES, DATES AND DEPTHS

SEED SELECTIONS	SEEDING RATE (1) (pounds)		OPTIMUM SEEDING DATE (2) based on Plant Hardiness Zone			OPTIMUM SEEDING DEPTH (3) (inches)
	Per Acre	Per 1000 Sq. Ft.	ZONE 5b, 6a	ZONE 6b	ZONE 7a, 7b	
COOL SEASON GRASSES						
PERENNIAL RYEGRASS	40	1.0	3/15-6/1 8/1-9/15	3/1-5/15 8/15-10/1	2/15-5/1 8/15-10/15	0.5
SPRING OATS	86	2.0	3/15-6/1 8/1-9/15	3/1-5/15 8/15-10/1	2/15-5/1 8/15-10/15	1.0
WINTER BARLEY	96	2.2	8/1-9/15	8/15-10/1	8/15-10/15	1.0
WINTER CEREAL RYE	112	2.8	8/1-11/1	8/1-11/15	8/1-12/15	1.0
WARM SEASON GRASSES						
PEARL MILLET	20	0.5	6/1-8/1	5/15-8/15	5/1-9/1	1.0
MILLET(GERMAN OR HUNGARIAN)	30	0.7	6/1-8/1	5/15-8/15	5/1-9/1	1.0
WEEPING LOVEGRASS	5	0.2	6/1-8/1	5/15-8/15	5/1-9/1	0.25

PERMANENT VEGETATIVE COVER

APPLICATION	SEED SELECTIONS	SEEDING RATE (pounds/Acre)	LIMESTONE (tons/Acre)	FERTILIZER (lbs/Acre)	OPTIMUM SEEDING DATES
RESIDENTIAL/COMMERCIAL LOTS	TURF TYPE TALL FESCUE	40	2	50 10-20-10	3/1-4/30 & 8/15-11/15
DRAINAGE DITCHES	REED CANARY GRASS	25	2	50 10-20-10	3/1-4/30 & 8/15-11/15
SWALES AND DETENTION BASINS	KENTUCKY BLUEGRASS	60			

1. SEEDING RATE FOR WARM GRASS, SELECTION 5-7 SHALL BE ADJUSTED TO REFLECT THE AMOUNT OF PURE LINE SEED (PLS) AS DETERMINED BY A GERMINATION TEST RESULT. NO ADJUSTMENT IS REQUIRED FOR COOL SEASON GRASSES
2. MAY BE PLANTED THROUGHOUT SUMMER, IF SOIL MOISTURE IS ADEQUATE OR SEEDED AREA CAN BE IRRIGATED
3. TWCE THE DEPTH FOR SANDY SOILS

Horizontal Scale: 1"= 20'
0 10 20 40 60 80

NOTES

1. PQ BEING LOT 27.01, IN BLOCK 5402, AS SHOWN ON TOWNSHIP OF WESTFIELD TAX MAPS.
2. LOT AREA = 28,753 SF. OR 0.66 AC.
3. ELEVATIONS BASED UPON AN ASSUMED DATUM.
4. UTILITY LOCATIONS SHOWN HEREON ARE APPROXIMATE BASED UPON SURFACE STRUCTURES VISIBLE ON THE DATE OF FIELD SURVEY. LOCATION OF UNDERGROUND UTILITIES/STRUCTURES MAY VARY FROM LOCATION SHOWN HEREON. ADDITIONAL BURIED UTILITIES/STRUCTURES MAY BE ENCOUNTERED. ALL SUBSURFACE UTILITY LOCATIONS SHOULD BE VERIFIED AND FIELD MARKED BY APPROPRIATE UTILITY AUTHORITY PRIOR TO EXCAVATION/CONSTRUCTION. ANY DEVIATION IN LOCATION OF UTILITIES SHOULD BE REPORTED TO SURVEYOR AND ENGINEER PRIOR TO CONSTRUCTION.
5. EXCEPT AS SPECIFICALLY STATED OR SHOWN ON THIS PLAT, THIS SURVEY DOES NOT PURPORT TO REFLECT ANY OF THE FOLLOWING WHICH MAY BE APPLICABLE TO THE SUBJECT REAL ESTATE: EASEMENTS, OTHER THAN POSSIBLE EASEMENTS WHICH WERE VISIBLE ON THE DATE OF FIELD SURVEY; BUILDING SETBACK LINES; RESTRICTIVE COVENANTS; SUBDIVISION RESTRICTIONS; ZONING OR OTHER LAND USE REGULATIONS, AND ANY OTHER FACTS SUCH THAT AN ACCURATE AND CURRENT TITLE SEARCH MAY DISCLOSE.
6. FILTER FABRIC FENCE AND/OR PROPERTY LINE DENOTES "LIMIT OF DISTURBANCE".

REVISIONS

SITE/GRADING & SEDIMENT CONTROL PLAN

FOREST GLEN COURT
TAX LOT 27.01 BLOCK 5402

TOWNSHIP OF WESTFIELD
UNION COUNTY, NJ

C A S E Y &

K E L L E R
I N C O R P O R A T E D

NJ State Board of Professional Engineers & Land Surveyors Certificate of Authorization # 24GA27985400

LICENSED PROFESSIONAL
CIVIL ENGINEERS
LAND SURVEYORS
PLANNERS

258 Main Street, PO Box 191
Millburn, New Jersey 07041
973-379-3280 Fax:973-379-7993

MICHAEL T. LANZAFAMA
DATE 11-30-2011
New Jersey Professional Engineer & Land Surveyor No. 30084
New Jersey Professional License No. LI00350300

REFERENCE	CHK. BY	DRAWN BY
MAP NO.	FIELD BOOK	DWG.NO.
1080424 JOB NO.	1" = 20' SCALE	1

PLAT FILE No.3118

J:\2008\108042\1080424\AUTOCAD\1080424.SITE.DWG 07/16/12 12:19:57PM, mchael, LAYOUT:SITE 27.01